SGM3145
8-Channel PWM Dimming Charge Pump White LED Driver

GENERAL DESCRIPTION

The SGM3145 is a high performance white LED driver. It integrates current sources and automatic mode selection charge pump. The part maintains the high efficiency by utilizing a 1×/1.5× fractional charge pump and low dropout current sources. The small equivalent 1× mode open loop resistance and ultra-low dropout voltage of current source extend the operating time of 1× mode and optimize the efficiency of Li-ion battery in white LED applications.

The SGM3145 supports up to 8 white LEDs and regulates a constant current which the initial value can be set by an internal resistor. The part implements PWM dimming to adjust the brightness of LED. Users can easily configure the LED current from 0mA to 27mA by a digital PWM signal. SGM3145 can be turned off by EN pin. The operating voltage range is 2.7V to 5.5V. Internal soft-start circuitry effectively reduces the in-rush current while both start-up and mode transition.

The SGM3145 is available in Green TQFN-3×3-20L package and is rated over the -40°C to +85°C temperature range.

FEATURES

- **Input Voltage Range: 2.7V to 5.5V**
- **Drives up to 8 LEDs at 27mA Each**
- **PWM Dimming**
- **High Efficiency by Fractional Conversion with 1× and 1.5× Modes**
- **Switching Frequency: 0.93MHz**
- **Regulated Output Current with ±4.8% Matching**
- **Internal Soft-Start Limits Inrush Current**
- **Low Input Ripple and Low EMI**
- **Over-Current and Over-Temperature Protection**
- **Under-Voltage Lockout with Hysteresis**
- **Available in Green TQFN-3×3-20L Package**

APPLICATIONS

Mobile Phone, DSC, MP3
White LED Backlighting
LCD Display Supply

PACKAGE/ORDERING INFORMATION

MODEL	PACKAGE DESCRIPTION	SPECIFIED TEMPERATURE RANGE	ORDERING NUMBER	PACKAGE MARKING	PACKING OPTION
SGM3145	TQFN-3×3-20L	-40℃ to +85℃	SGM3145YTQG20G/TR	SGM 3145QG XXXXX	Tape and Reel, 3000

MARKING INFORMATION

NOTE: XXXXX = Date Code and Vendor Code.

XXXXX

- Vendor Code
- Date Code - Week
- Date Code - Year

Green (RoHS & HSF): SG Micro Corp defines "Green" to mean Pb-Free (RoHS compatible) and free of halogen substances. If you have additional comments or questions, please contact your SGMICRO representative directly.

ABSOLUTE MAXIMUM RATINGS

V_{IN} to GND ..... -0.3V to 6V
The Other Pins to GND ..... -0.3V to V_{IN}
Power Dissipation, P_D @ T_A = +25℃
TQFN-3×3-20L 1.48W
Junction Temperature ..... +150℃
Storage Temperature Range ..... -65℃ to +150℃
Lead Temperature Range (Soldering 10s) ..... +260℃
ESD Susceptibility
HBM 2000V
MM 200V

RECOMMENDED OPERATING CONDITIONS

Operating Temperature Range ..... -40℃ to +85℃

OVERSTRESS CAUTION

Stresses beyond those listed in Absolute Maximum Ratings may cause permanent damage to the device. Exposure to absolute maximum rating conditions for extended periods may affect reliability. Functional operation of the device at any conditions beyond those indicated in the Recommended Operating Conditions section is not implied.

ESD SENSITIVITY CAUTION

This integrated circuit can be damaged if ESD protections are not considered carefully. SGMICRO recommends that all integrated circuits be handled with appropriate precautions. Failure to observe proper handling and installation procedures can cause damage. ESD damage can range from subtle performance degradation to complete device failure. Precision integrated circuits may be more susceptible to damage because even small parametric changes could cause the device not to meet the published specifications.

DISCLAIMER

SG Micro Corp reserves the right to make any change in circuit design, or specifications without prior notice.

PIN CONFIGURATION

SGM3145 (TOP VIEW)

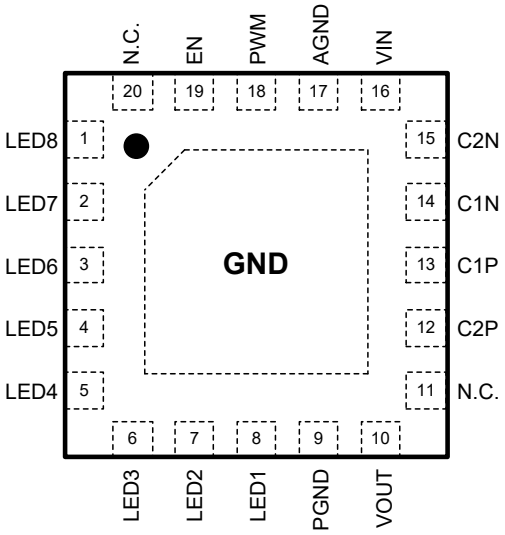

TQFN-3×3-20L

PIN DESCRIPTION

PIN	NAME	I/O	FUNCTION
1, 2, 3, 4, 5, 6, 7, 8	LED8 - LED1	I	Current Sink Input. Connect the cathode of the white LEDs to these inputs.
9	PGND	-	Power Ground.
10	VOUT	O	Output Voltage Source. Connect the output capacitor and the anode of the LEDs to this pin.
11, 20	N.C.	-	No Internal Connection.
12	C2P	-	Positive Terminal of Bucket Capacitor 2.
13	C1P	-	Positive Terminal of Bucket Capacitor 1.
14	C1N	-	Negative Terminal of Bucket Capacitor 1.
15	C2N	-	Negative Terminal of Bucket Capacitor 2.
16	VIN	I	Supply Voltage Input.
17	AGND	-	Analog Ground.
18	PWM	I	PWM Dimming Pulse. Duty cycle = 0%, I_{OUT} = 0mA; duty cycle =100%, I_{OUT} = 27mA.
19	EN	I	Enable or Disable SGM3145. Logic high to enable chip, logic low to disable chip. For normal operation, suggest connecting to VIN only after the VIN has settled if the VIN ramping up is slow.
Exposed Pad	GND	-	Exposed pad should be soldered to PCB board and connected to GND.

ELECTRICAL CHARACTERISTICS

(V_{IN} = 3.6V, EN = V_{IN}, T_A = +25℃, unless otherwise noted.)

PARAMETER		SYMBOL	CONDITIONS	MIN	TYP	MAX	UNITS
Supply Voltage and Current							
Input Voltage Range		V_{IN}		2.7		5.5	V
Quiescent Power Supply Current		I_Q	V_{IN} = 4.2V, 1× Mode, I_{LEDx} = 0mA		155	240	μA
			1.5× Mode, I_{LEDx} = 0mA		1.35		mA
Shutdown Supply Current		I_{SHDN}	EN = GND, V_{IN} = 4.2V		0.01	2.5	μA
Charge Pump Stage							
Over-Voltage Limit		V_{OUT}			5.4		V
Start-Up Time			C_{OUT} = 1μF, $I_{LEDx} \geq 0.9 \times I_{LEDx\text{-}set}$		280		μs
Soft-Start Duration					150		μs
Switching Frequency		f		0.7	0.93	1.25	MHz
Efficiency		η	At 1× Mode before switching to 1.5× Mode		90		%
Shutdown Temperature			Temperature rising		140		℃
Shutdown Temperature Hysteresis					10		℃
Input Current Limit					300		mA
Current Sinks							
Recommended Maximum Current per Current Sink		I_{LEDx}	3.2V ≤ V_{IN} ≤ 5.5V	24	27	30	mA
Current Matching between Any Two Outputs			V_{LEDx} = 3.2V, I_{LEDx} = 27mA	-4.8	1	4.8	%
Line Regulation			3.3V < V_{IN} < 5.5V, V_{LEDx} = 3.2V		1.4		%
Voltage at LED_X to GND		V_{SOURCE}	V_{IN} = 4.2V		550		mV
Threshold of Switching between 1× and 1.5× Mode							
1× Mode to 1.5× Mode			V_{LEDX} = 3.2V		3.48		V
1.5× Mode to 1× Mode			V_{LEDX} = 3.2V		3.65		V
EN and PWM Logic							
PWM Low Time for Dimming		T_{LO}		0.5			μs
PWM High Time for Dimming		T_{HI}		4			μs
Threshold	Logic-High Voltage	V_{IH}		1.2			V
	Logic-Low Voltage	V_{IL}				0.4	V

TYPICAL PERFORMANCE CHARACTERISTICS

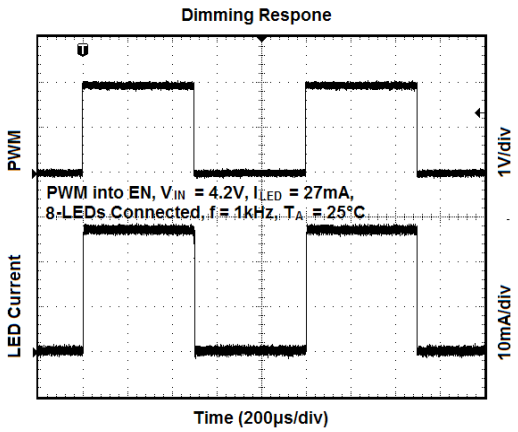

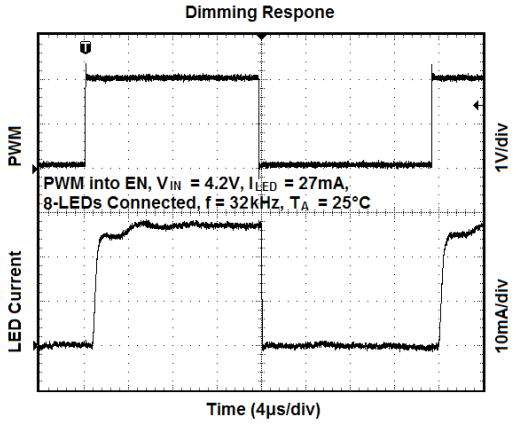

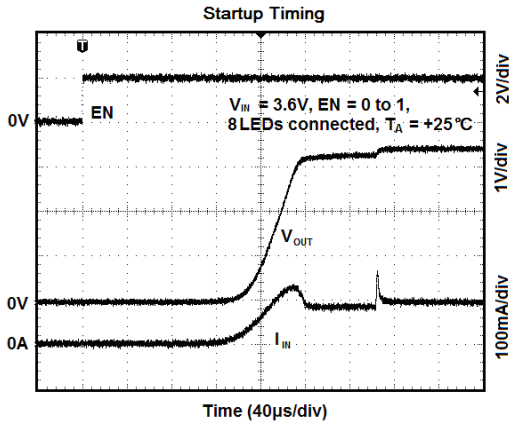

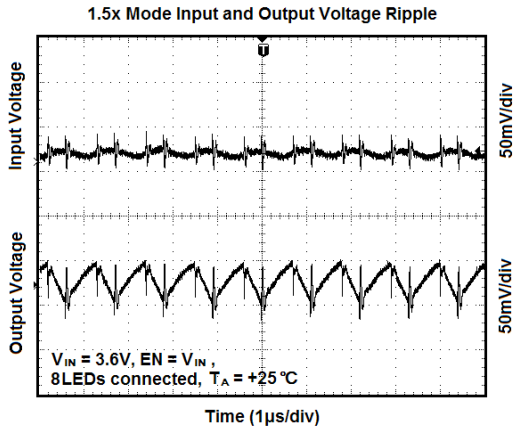

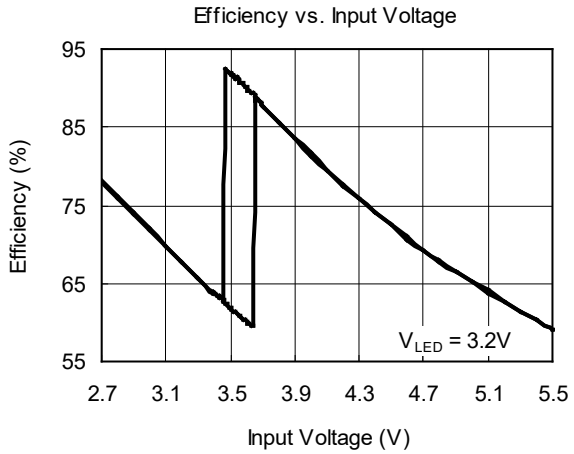

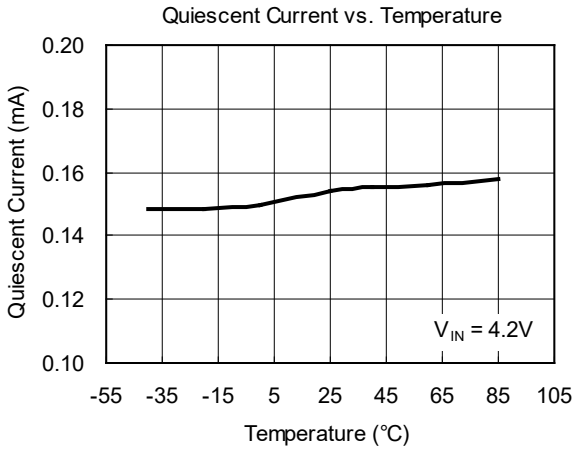

TYPICAL PERFORMANCE CHARACTERISTICS (continued)

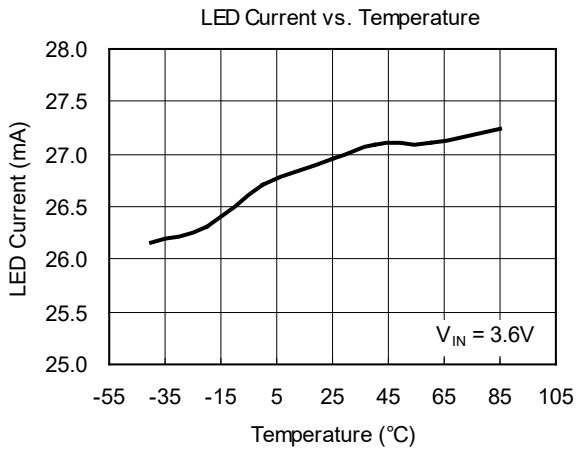

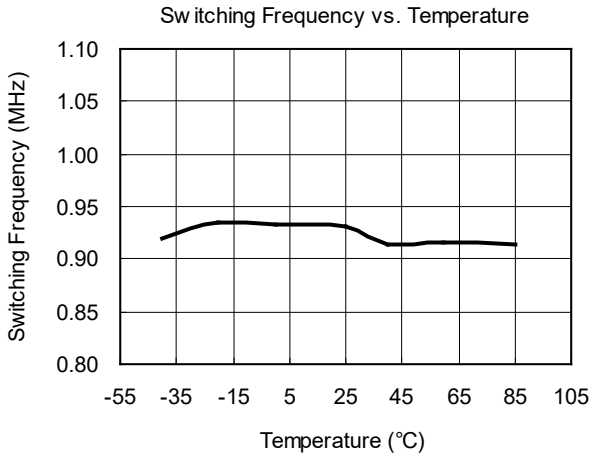

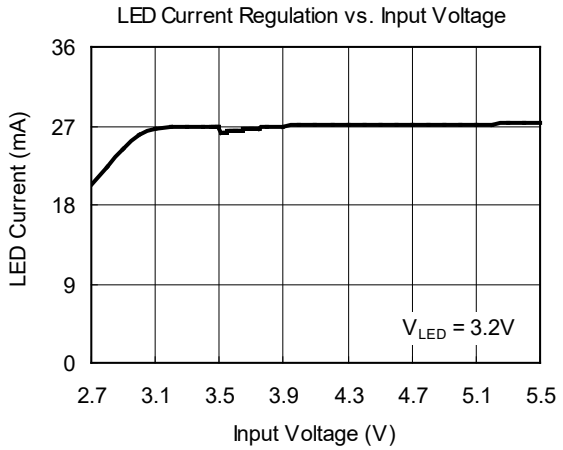

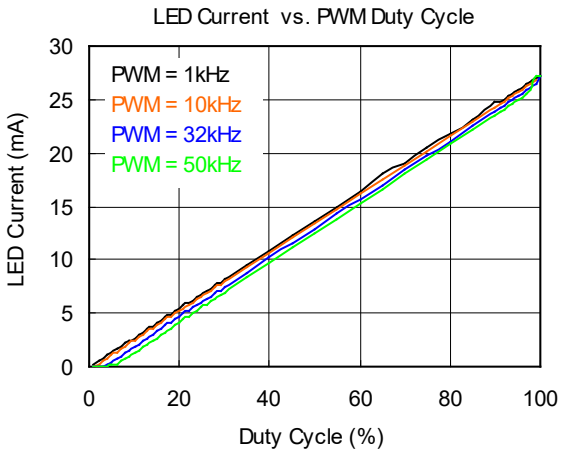

FUNCTIONAL BLOCK DIAGRAM

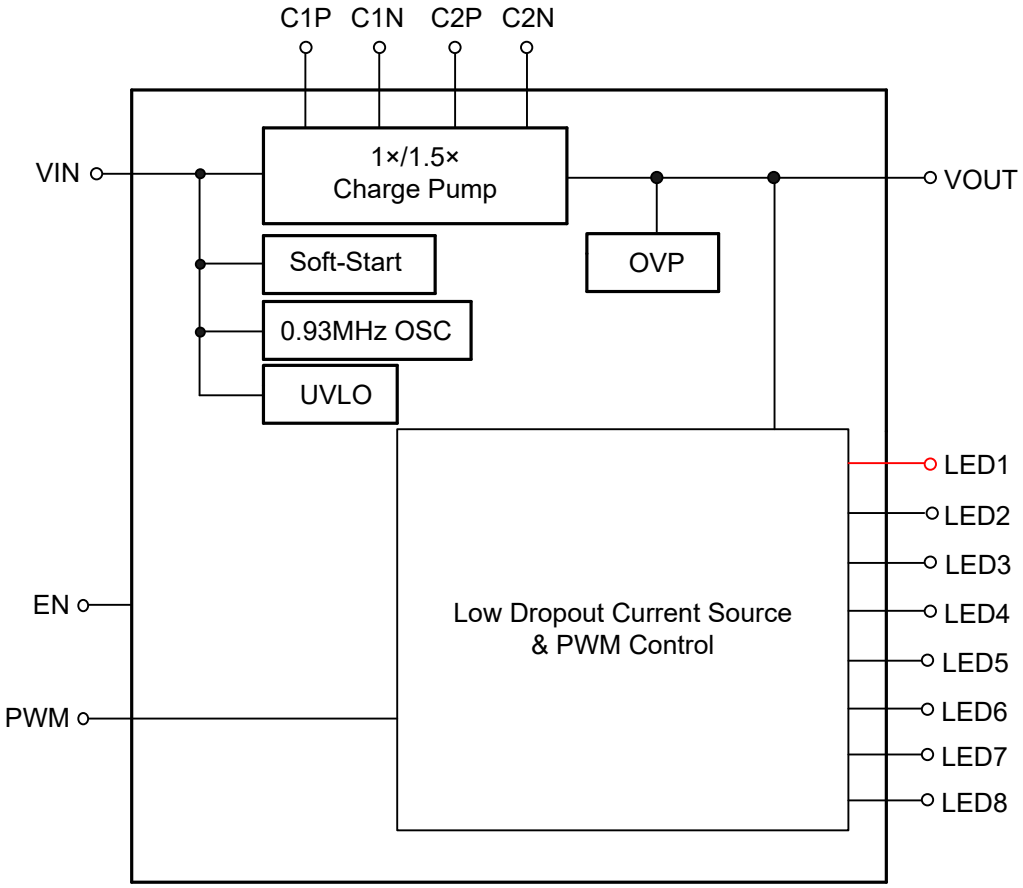

TYPICAL APPLICATION

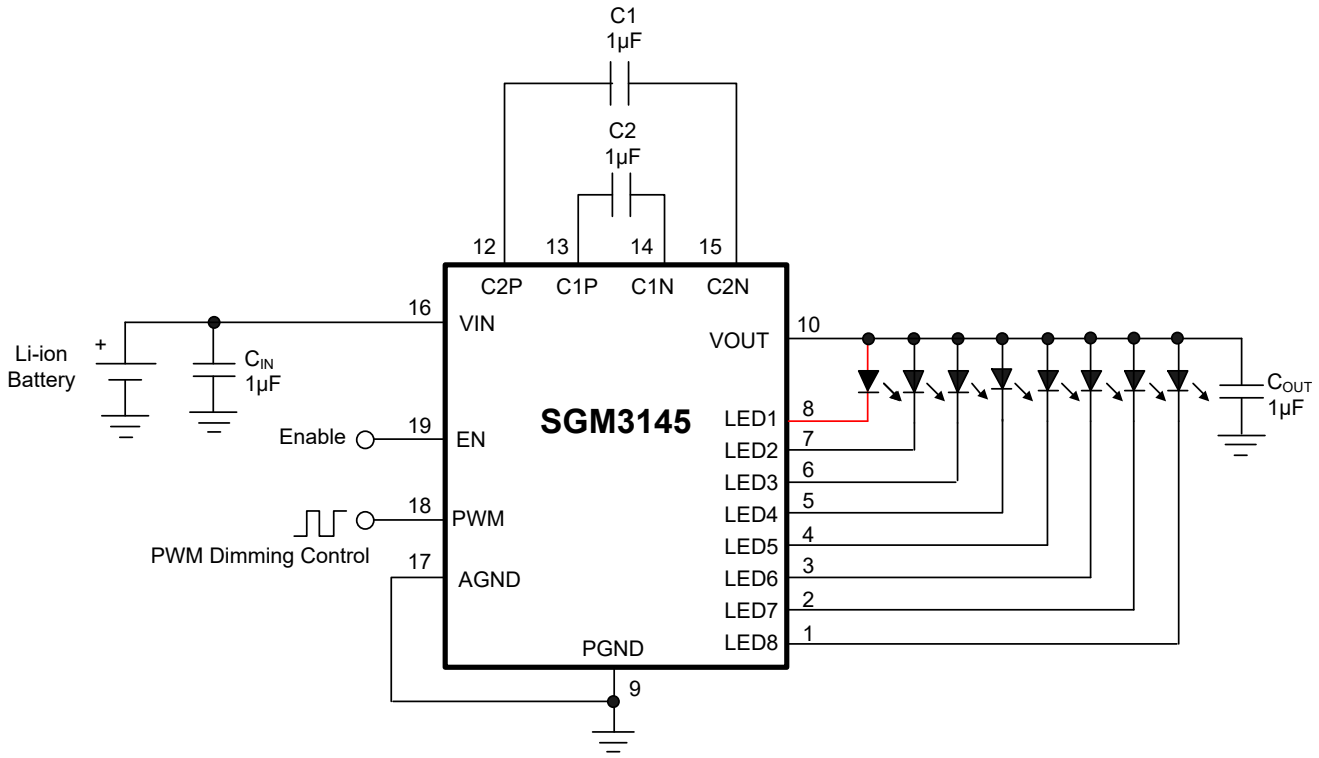

Figure 1. For 8-WLEDs Application Circuit

APPLICATION INFORMATION

The SGM3145 uses a fractional switched capacitor charge pump to power up to 8 white LEDs with a programmable current for uniform intensity. The part integrates current sources and automatic mode selection charge pump. It maintains the high efficiency by utilizing a 1×/1.5× fractional charge pump and current sources. The small equivalent 1× mode open loop resistance and ultra-low dropout voltage of current source extend the operating time of 1× mode and optimize the efficiency in white LED applications.

Input UVLO

The input operating voltage range of the SGM3145 is 2.7V to 5.5V. An input capacitor at the VIN pin could reduce ripple voltage. It is recommended to use a ceramic 1μF or larger capacitance as the input capacitor. This IC provides an under-voltage lockout (UVLO) function to prevent it from unstable issue when startup. The UVLO threshold of input rising voltage is set at 2.15V typically with a hysteresis 30mV.

Soft-Start

The SGM3145 employs a soft-start feature to limit the inrush current. The soft-start circuit prevents the excessive inrush current and input voltage droop. The soft-start clamps the input current over a typical period of 150μs.

Mode Decision

The SGM3145 uses a smart mode selection method to decide the working mode for optimizing the efficiency. Mode decision circuit senses the output and LED voltage for up/down selection. The SGM3145 automatically switches to 1.5× mode whenever the dropout condition is detected from the current source and returns to 1× mode whenever the dropout condition releases.

Chip Enable and Shutdown

When EN is in “High” status, SGM3145 will enter into active status. When EN is in “Low” status and SGM3145 will enter into shutdown status.

Over-Voltage Protection

The SGM3145 equips over-voltage protection function. When LED1 is open, the output voltage will be clamped to 5.4V.

LED Connection

The SGM3145 supports up to 8 white LEDs. The 8 LEDs are connected from VOUT to pin 1, 2, 3, 4, 5, 6, 7 and 8 respectively. Figure 1 shows the connection for 8-WLEDs application. LED1 to LED8 are controlled by EN pin. The SGM3145 internal current source reference circuit bases feedback from current sensed on the LED1 output. For best operation, the only requirement for this type of application is the output LED1 should always be connected to the load circuit. The other LED pins (LED2, 3, 4, 5 …) can be left floating if those white LEDs are not used.

LED Dimming Control Interface

An internal resistor sets the maximum LED current to be 27mA. One PWM signal at PWM pin can dim the brightness of LED from 0mA to 27mA. When duty cycle = 0%, the current is 0mA; when duty cycle = 100%, the current is 27mA.

Selecting Capacitors

To get the better performance of SGM3145, the selection of peripherally appropriate capacitor and value is very important. These capacitors determine some parameters such as input/output ripple voltage, power efficiency, and maximum supply current by charge pump. To reduce the input and output ripple effectively, the low ESR ceramic capacitors are recommended. For LED driver applications, the input voltage ripple is more important than output ripple. Input ripple is controlled by input capacitor C_{IN}, increasing the value of input capacitance can further reduce the ripple. Practically, the input voltage ripple depends on the power supply impedance. The flying capacitor C1 and C2 determine the supply current capability of the charge pump and to influence the overall efficiency of system. The lower value will improve efficiency, but it will limit the LED's current at low input voltage. For 8 × 27mA load over the entire input range of 2.7V to 5.5V, it is recommended to use a 1μF ceramic capacitor on the flying capacitor C1 and C2.

REVISION HISTORY

NOTE: Page numbers for previous revisions may differ from page numbers in the current version.

JANUARY 2013 – REV.A to REV.A.1	Page
Added Tape and Reel Information section	12, 13

Changes from Original (MAY 2012) to REV.A	Page
Changed from product preview to production data	All

PACKAGE OUTLINE DIMENSIONS

TQFN-3×3-20L

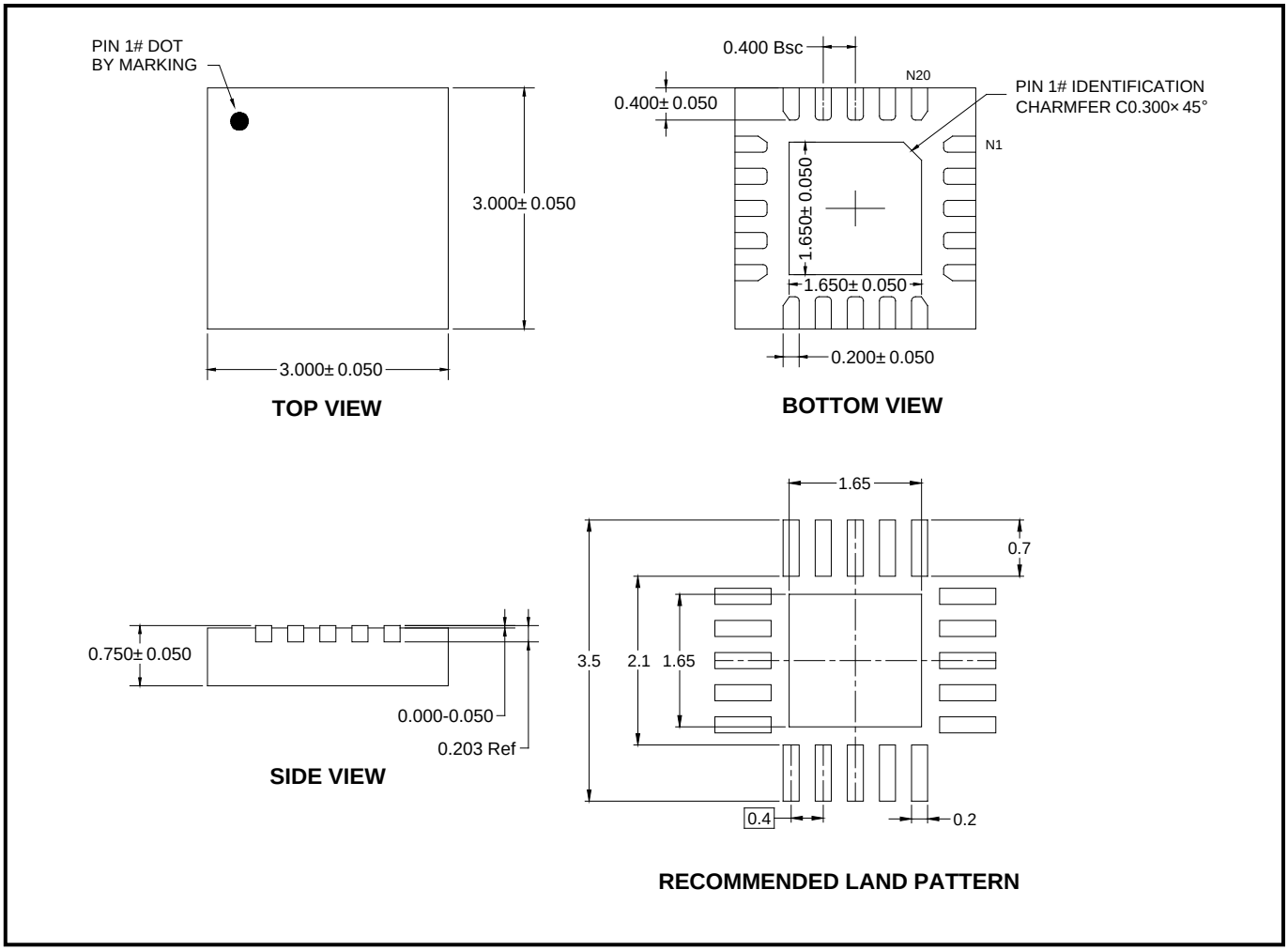

NOTE: All linear dimensions are in millimeters.

TAPE AND REEL INFORMATION

REEL DIMENSIONS

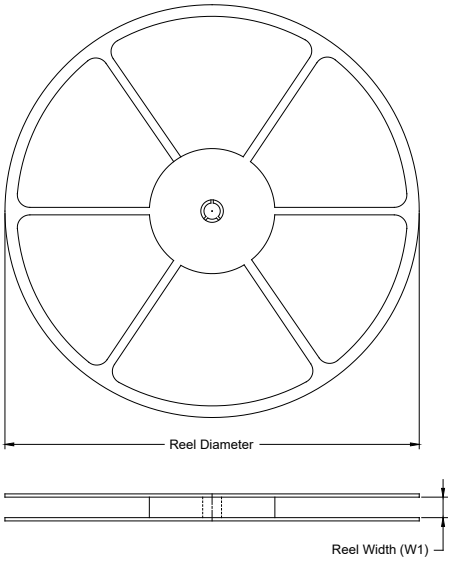

TAPE DIMENSIONS

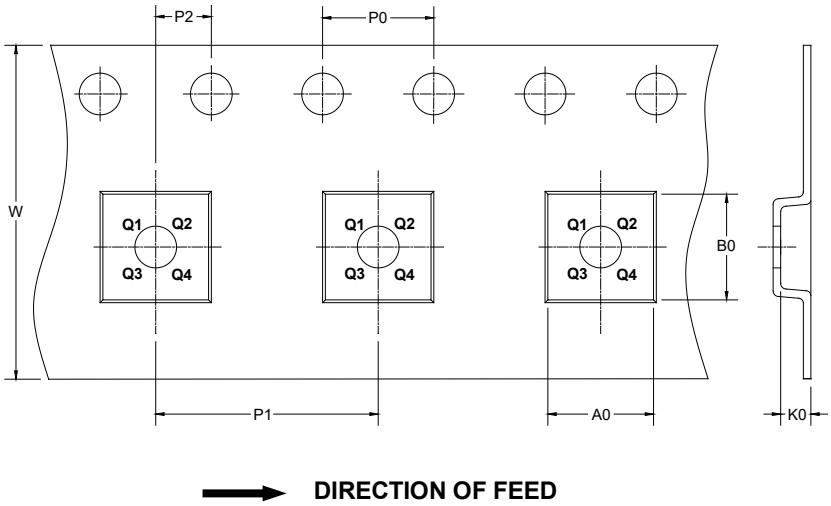

NOTE: The picture is only for reference. Please make the object as the standard.

KEY PARAMETER LIST OF TAPE AND REEL

Package Type	Reel Diameter	Reel Width W1 (mm)	A0 (mm)	B0 (mm)	K0 (mm)	P0 (mm)	P1 (mm)	P2 (mm)	W (mm)	Pin1 Quadrant
TQFN-3×3-20L	13″	12.4	3.30	3.30	1.10	4.0	8.0	2.0	12.0	Q1

DD0001

CARTON BOX DIMENSIONS

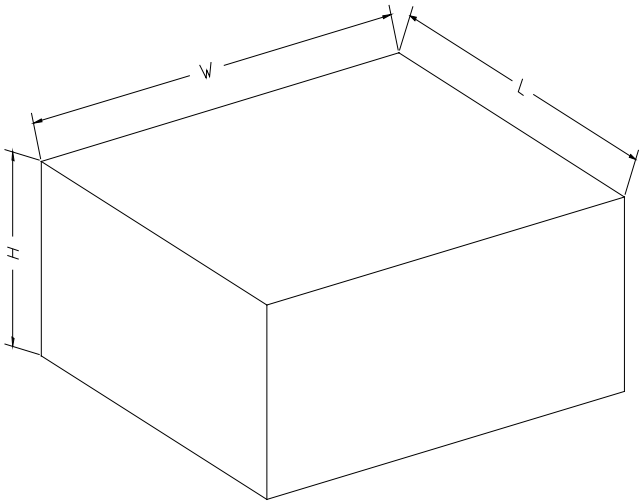

NOTE: The picture is only for reference. Please make the object as the standard.

KEY PARAMETER LIST OF CARTON BOX

Reel Type	Length (mm)	Width (mm)	Height (mm)	Pizza/Carton
13″	386	280	370	5

DD0002